HONEYVILLE

Distributor
Electronic Positioning Control

Model

EPC – Version 1.X

Honeyville Metal, Inc.

4200 S 900 W
Topeka, IN 46571

Revision Date: 3/6/2002

TABLE OF CONTENTS

Table of Contents 1-1
Introduction 2-1
Parts List 3-1
    Drive Components 3-2
    Control Components 3-4
Installation 4-1
    Transportation 4-1
    Environment 4-1
    Wiring 4-1
    Changing Voltage 4-2
    Adjusting Calibration Arm 4-2
Operation 5-1
    Direction of Travel 5-1
    Lights 5-1
    Function Buttons 5-1
        Setup Function 5-1
        Calibrate Function 5-3
        Run Function 5-3
        Manual Function 5-4
        Remote Function 5-4
Troubleshooting 6-1
    Errors 6-1
        Invalid Entry 6-1
        Calibration Error 6-1
        Motion Errors 6-1
    Control Not Running 6-2
    Emergency Procedures 6-2
External Control 7-1
Warranty 8-1
Certificate of Quality 8-2
Control Enclosure Wiring Diagram
Drive Enclosure Wiring Diagram
Supplemental Data Sheets

This page intentionally left blank.

INTRODUCTION

Thank you for purchasing a Honeyville Electronic Positioning Control for your distributor. This manual will help you understand the operation of the control, guide you through the installation process, and give you a reference for ordering replacement parts for your control.

Honeyville Metal, Inc.
4200 S 900 W
Topeka, IN 46571
Phone: (260) 593-2266
Fax: (260) 593-2486
www.HoneyvilleMetal.com

This page intentionally left blank.

PARTS LIST

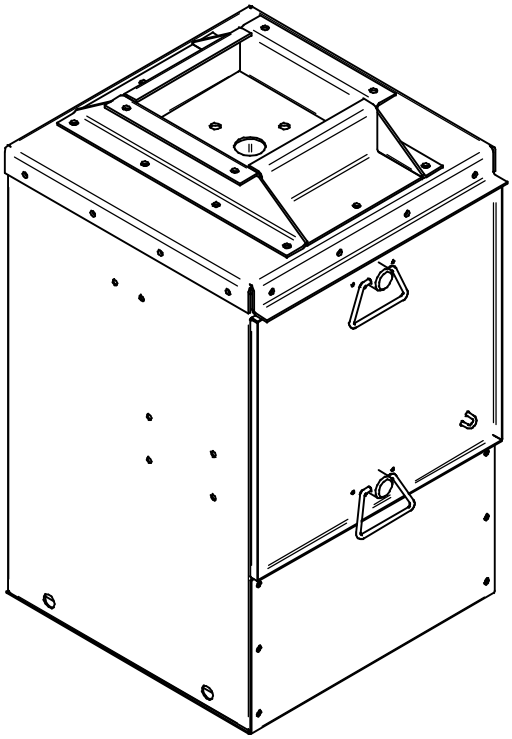

Drive Components…3-2

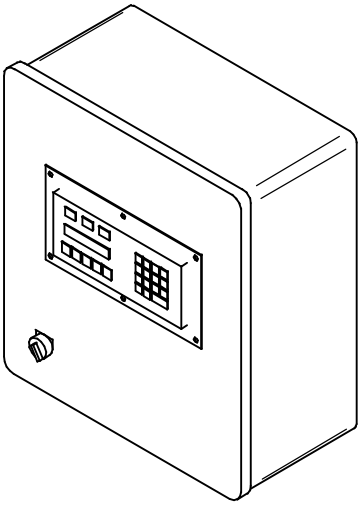

Control Components…3-4

DRIVE COMPONENTS

Item	Qty	Description	Part #
1	1	1-1/2" Shaft Reduced & Keyed	
2	1	Mounting Bracket for Honeyville Distributor	
3	1	Drive Enclosure w/ Door	
4	1	1-1/4" Flange Bearing	UCF207-20E
5	1	Calibration Arm	
6	1	Torque Arm Angle	
7	2	1/2" Rod End - Female	6G175
8	1	1/2"-20 Rod x 9 5/8"	
9	1	500:1 Speed Reducer	920MDSRD
10	1	2" O.D. Washer	
11	1	Rotopulser Encoder	R 45 0060 1222
12	1	Double C-Face Brake	1-056-711-08-QF
13	1	1/4 HP 56C TEFC Motor 1140 RPM	2R970
14	2	12 mm Proximity Switch	6C798
15	2	Switch Mount	
16	1	Emergency Handle	

DRIVE COMPONENTS

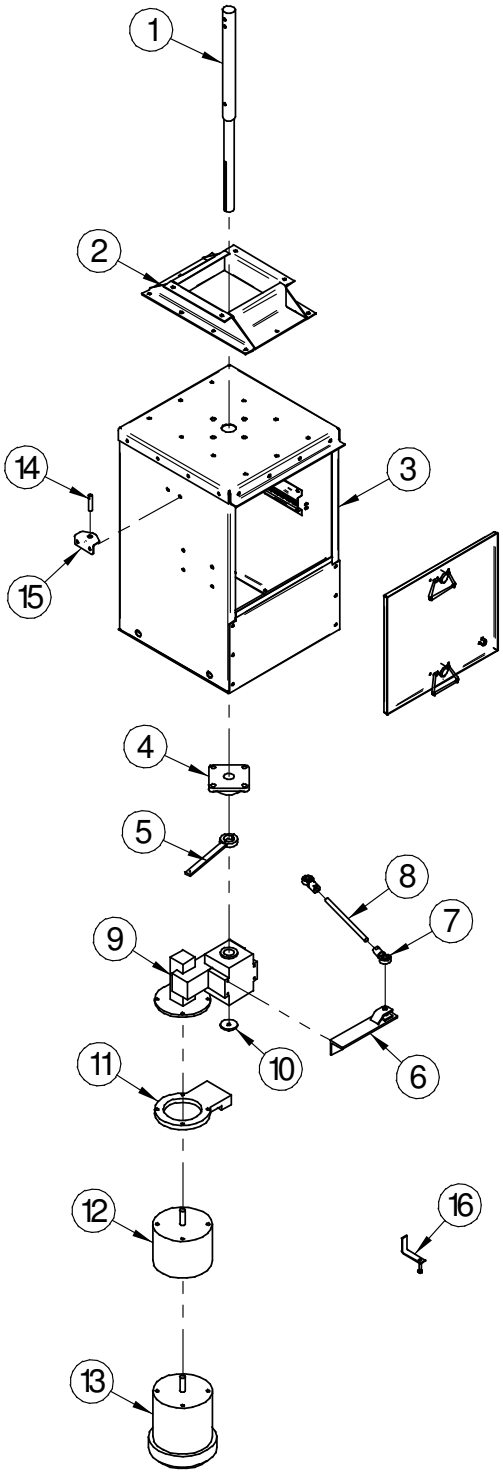

CONTROL COMPONENTS

Item	Qty	Description	Part #
1	1	Fiberglass Enclosure	6917K38
2	1	2 Position Selector Switch	5B509
3	3	Contact Block	5B536
4	1	Three Phase Line Monitor	5JJ49
5	1	Reversing Contactor	SQDLC2K0601F7
6	1	.54-.8 Amp Overload Relay (High Voltage Option)	SQDLR2K0305
		.8-1.2 Amp Overload Relay (Low Voltage Option)	SQDLR2K0306
7	1	240/480 to 120 Transformer	9070T100D1
8	1	Micro PLC	D0-05DA
9	1	24VDC Power Supply	FA-24PS
10	1	Operator Panel Cable	OP-2CBL
11	1	Operator Panel	OP-1500

CONTROL COMPONENTS

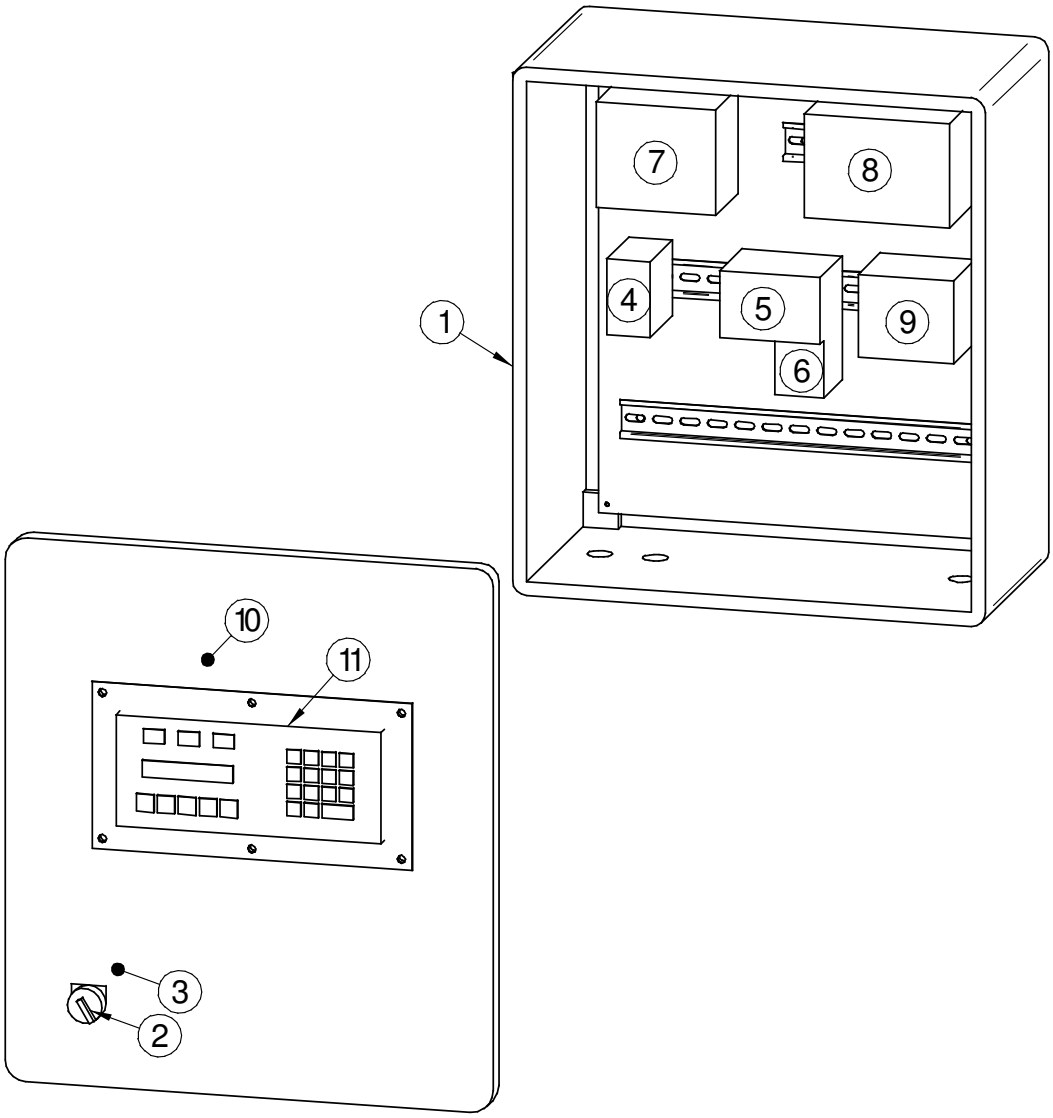

This page intentionally left blank.

INSTALLATION

Transportation

If the electric control is attached to a distributor, transport the distributor on its back. Do not put excessive stress on the drive enclosure.

Environment

Mount the control enclosure in a clean, dry, indoor environment. Please observe these operating temperatures:

Operating Temperatures		
	Minimum	Maximum
Control Enclosure	40° F	120° F
Drive Enclosure	-40° F	185° F

Wiring

See diagram for wire and conduit details. Do not let AC and DC wires to cross. Keep AC wiring to the lower left corner of the control enclosure and to the front and left side of the drive enclosure. Keep DC wiring to the lower right side on the control enclosure and to the back and right side of the drive enclosure. Connect wires to blue terminals only.

Adjust the voltage monitor to the correct voltage.

If voltage rotation in incorrect, the voltage monitor will show a red light, and the rest of the equipment will not start. If this happens, switch any two input wires to correct the rotation.

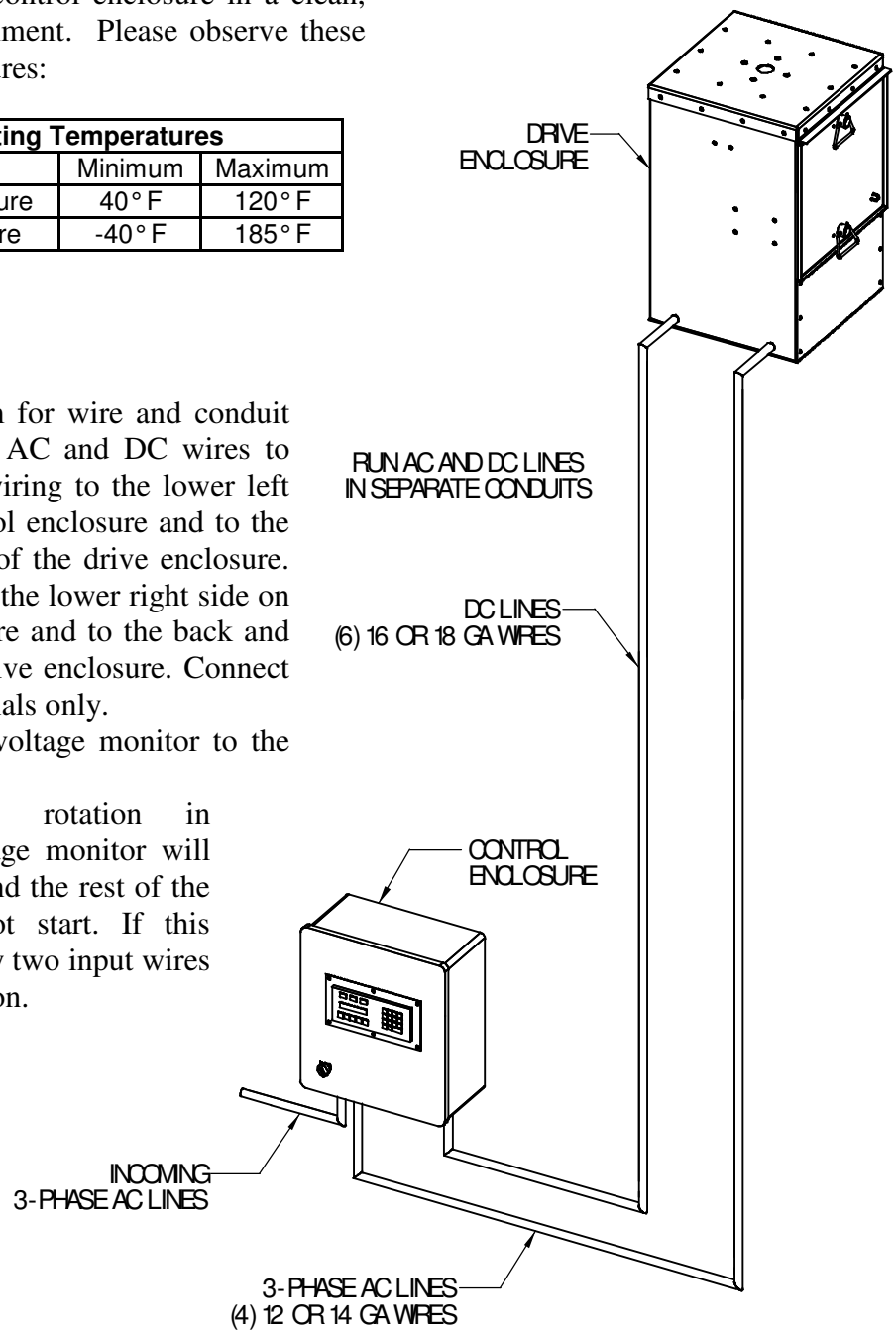

Changing Voltage

This chart lists the voltages at which the EPC can operate.

Operating Voltages	
High Voltage	440/460/480 VAC
Low Voltage	220/230/240 VAC

The voltage has been preset at the factory. Under normal circumstances, you should not need to make any changes to the voltage settings. Adjustments within a voltage range can be made on the voltage monitor in the control enclosure. If you need to change voltage ranges, follow these steps.

Changing from High Voltage to Low Voltage	Changing from Low Voltage To High Voltage
1. Rewire motor. Refer to Drawing # EC_DWIRE.	1. Rewire motor. Refer to Drawing # EC_DWIRE.
2. Rewire brake.	2. Rewire brake.
3. Replace Overload Relay with SQDLD2K0306 .8-1.2 Amp Overload Relay. Set for 1.2 amps and automatic reset.	3. Replace Overload Relay with SQDLD2K0305 .54-.8 Amp Overload Relay. Set for .6 amps and automatic reset.
4. Change jumpers on Transformer. See Drawing # EC_CWIRE. There are two jumpers between H2 and H3. Place one between H1 and H3, the other between H2 and H4.	4. Change jumpers on Transformer. See Drawing # EC_CWIRE. Remove the two jumpers between H1 and H3 and between H2 and H4, and place them both between H2 and H3.
5. Adjust Voltage Monitor to proper voltage.	5. Adjust Voltage Monitor to proper voltage.
6. Record new voltage setup on page 2 of the service manual.	6. Record new voltage setup on page 2 of the service manual.

Adjusting Calibration Arm

The calibration arm has been preset at the factory. Under normal circumstances you should not need to make any changes to the calibration arm.

If you have a flatback distributor, manually run the spout against the wall near hole number one. If you have a round distributor, center the spout over hole number one.

Adjust the calibration arm so the trailing (near) edge is even with the near edge of the proximity switch on the left side on the drive enclosure, and the bottom is about 1/16" (.0" - .8") above the top of the proximity switch. When the power is turned on, a red light will be lit in that proximity switch. In manual mode, turn the spout forward until the calibration arm is over the proximity switch on the right side on the drive enclosure. It should also be about 1/16" above the proximity switch, which should be lit up. To make further adjustments, see the Setup Function elsewhere in this manual .

OPERATION

Direction of Travel

In this documentation, reverse means the spout is moving down to a lower outlet number, toward the first outlet, or clockwise when looking at the Distributor from above. On a Flatback Honeyville Distributor, reverse is moving toward the door.

Forward means the spout is moving up to a higher outlet number, toward the last outlet, or counterclockwise when looking at the Distributor from above. On a Flatback Honeyville Distributor, forward is moving away from the door.

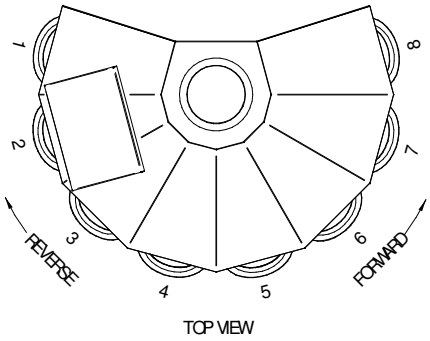

Lights

Color	Description	Comments
Green	Ready	Spout is locked into position
Yellow	Manual Mode	Potentially out of position
Yellow (flashing)	Moving	
Red	Error	See the “Troubleshooting” chapter
Red (flashing)	Action required	Follow on-screen instructions

Function Buttons

There are five function buttons on the operator panel. Press a function button to enter a mode of operation.

If an error is generated, you will need to restart the function that you were in. Example: If you are in the Run Function and enter the number “0” as the outlet to move to, an “Invalid Entry” message will appear in the display. Press the “Run” button to return to the Run Function.

Setup Function

- Enter the Setup Function by pressing the “Setup” button on the Operator Panel.
- The Setup Function needs to be run at least once before you can start the Calibrate or Run Functions.
- Settings are stored permanently in the PLC. They will be retained even if the power is off.
- If your Electronic Control was purchased with a new Honeyville Distributor, the settings have been pre-set at the factory. You should go through the Setup Function to verify the settings.
- If you pass the “Number of Outlets” step in the setup process, you will be required to calibrate before entering the Run Function.

Process

1. Setup Code
   - You are required to enter a Setup Code before continuing into the Setup Function. This prevents unauthorized changes to settings.
   - Use the keypad to enter the Setup Code, then press “Enter”.
2. Reverse and Forward Alignment Adjustment
   - These adjustments ensure that the spout will lock into position when centered on the outlet. This adjustment compensates for a tiny coast time from the time the spout comes into position until the time that the spout locks. Without this adjustment, the spout would tend to stop left of center when moving in reverse and to the right of center when moving forward.
   - Separate adjustments are made for reverse and forward.
   - These adjustment numbers are obtained through a trial and error process in which the spout is moved to an outlet, then visually inspected for centeredness.
   - If you are working with a Flatback Distributor, it is recommended that you do not use the first or last outlets for this adjustment process.
   - You only need to set the alignment adjustments for one outlet. Assuming that all of your other settings are correct, if the alignment is set correctly for one outlet, all other outlets will also be correct.
   - If the spout is stopping to the right of center, use a smaller number.
   - If the spout is stopping to the left of center, use a larger number.
   - The adjustment number will move the spout by quarter degrees relative to the number 50.
   - Never use a Revere Alignment Adjustment of less than 50.
   - Use the arrow keys to adjust Alignment Adjustment settings, then press “Enter”.
   - If you have previously completed Setup and Calibration, you can press “Run” at this point and not be forced to calibrate. This is convenient during the trial and error process described above.
3. Number of Outlets
   - This number is equal to the number of outlets on your Distributor.
   - Use the arrows to adjust the Number of Outlets setting, then press “Enter”.
4. Outlet Spacing
   - This number is the number of quarter degrees between outlets on your Distributor. To calculate this number, take the degrees between outlets and multiply by four.
   - Use the arrows to adjust the Outlet Spacing setting, then press “Enter”.
5. Use Outlets
   - Setup will cycle through each outlet asking whether or not to use that outlet. 0 means the outlet is not usable; 1 means the outlet is usable.
   - Use the arrows to adjust the Use Outlet setting, then press "Enter".

6. Beep
   - This number controls whether the Operator Panel beeps when you press buttons on the keypad. 0 turns the beeper off, and 1 turns it on.
   - Use the arrows to adjust the Beep setting, then press “Enter”.

Calibrate Function

- Enter the Calibrate Function by pressing the “Calib” button on the Operator Panel.
- The Setup Function needs to be run at least once before you can start the Calibrate Function.
- You must calibrate:
  1. Every time you power up
  2. Every time you pass the “Number of Outlets” step in the setup process
- If the power is always on, it is recommended that you calibrate daily to verify that the equipment is functioning properly.
- If any errors are encountered during the Calibration process, a “Calibration Error” is displayed.

Process

1. The Motor runs in reverse until the leading edge of the Calibration Arm passes over Proximity Switch A. This sets the zero reference point.
2. The Motor runs forward until the Calibration Arm reaches Proximity Switch B, then checks the Encoder count to verify that there are 180° between the switches.
3. The Motor continues forward until the spout reaches the last usable outlet, then automatically switches to the Run Function.

Run Function

- Enter the Run Function by pressing the “Run” button on the Operator Panel.
- The Setup Function and the Calibrate Function need to be completed before you can start the Run Function.

Process

1. Use the keypad to enter the number of the outlet you want to move to, then press “Enter”.
2. The spout will move to that outlet.
3. When the spout reaches the outlet and is locked into position, the green light will turn on and the Distributor will be ready for operation.

Manual Function

- Enter the Manual Function by pressing the “Manual” button on the Operator Panel.
- The Manual Function is primarily for diagnostic and maintenance purposes.
- The number displayed is the number of quarter degrees from the zero reference point.
- Be careful when using the Manual Function; it is possible to run the spout into the back wall of a Flatback Distributor.

Process

1. Press the Up arrow on the Operator Panel to move the spout forward.
2. Press the Down arrow to move the spout in reverse.

Remote Function

- Enter the Remote Function by pressing the "Remote" button on the Operator Panel.
- The Setup Function and the Calibrate Function need to be completed before you can start the Run Function.
- While in the Remote Function, the bottom line of the display will read "Remote".
- When the green light is on, the top line shows the current outlet and the Distributor is ready for operation.
- See the "External Control" chapter for more information.

TROUBLESHOOTING

Errors

Invalid Entry

Cause:

- Entering a number on the keypad that is too high or too low

Action:

- Press the Function button to restart the Function that you were performing.

Calibration Error

Occurs when an error is encountered during the Calibration process.

Causes:

- Loose or incorrect wiring
- Faulty Proximity Switches, Encoder, Speed Reducer, Motor, Starter, or PLC.

Calibration Errors	
Number	**Description**
1	Arm stays over switch A.
2	Switch B is on when arm is at switch A.
3	Switch B turns on too soon.
4	Arm is past switch B.
5	No usable outlets.

Actions:

- Check that all wiring is connected properly.
- Enter the Manual Function and press an arrow button. If the displayed number changes, the Motor and Encoder are working. If the spout moves, the Motor and Speed Reducer are working.
- Stay in the Manual Function and open the Control Enclosure. If you press the "Down" button, the "Y0" light on the PLC should light up, and the reverse side of the Starter should click in. If you press the "Up" button, the "Y1" light on the PLC should light up, and the forward side of the Starter should click in.
- Open the Drive Enclosure. If you place a metal object over the Proximity Switch on the left side of the enclosure (Proximity Switch A), an operation indicator at the base of the switch should light, and the "X2" indicator on the PLC should light. If you place a metal object over the Proximity Switch on the right side of the enclosure (Proximity Switch B), an operation indicator at the base of the switch should light, and the "X3" indicator on the PLC should light.
- Check the space between the Calibration Arm and the Proximity Switches. When the Calibration Arm is directly over a Proximity Switch, it should be closer than 2 mm (.08 in), and the operation indicator at the base of the switch should light.

Motion Error

Occurs when power is being sent to the Motor, but the Encoder isn't registering motion.

Causes:

- Debris or ice in Distributor
- Loose or faulty wiring.
- Faulty Encoder, Motor, Starter, or PLC.

Actions:

- Run the Calibration Function. The cause of the error might be cleared.
- Open the inspection door on the Distributor check for obstructions.
- Check that all wiring is connected properly.

Control Not Running

If the Operator Panel does not move past the startup message when you power up, the PLC might have stopped running. Follow these steps to restart the PLC. **Use extreme caution; these steps must be performed with the power on.**

1. Open the door of the Control Enclosure.
2. Look for a light labeled "Run" on the face of the PLC. If the light is off, continue to the next step.
3. Find the small silver switch on the top of the PLC. This is a three-position switch that should be in the center position.
4. Move the switch to the left, the back to the center position.
5. The "Run" light should be on.
6. Close the door of the Control Enclosure.

Emergency Procedures

Here are some suggestions for you if the equipment fails to function properly.

- If the PLC or Operator Panel are not working, you can move the spout by opening the Control Enclosure and engaging the forward or reverse side of the Starter. Be careful; you could run the spout into the back wall of a Flatback Distributor.
- There is an override switch on the side of the Brake.
- If the Motor is not working, disconnect the power, then loosen the four nuts and drop the Motor, Brake and Encoder to the floor of the Drive Enclosure. Insert the Emergency Turning Device into the Speed Reducer. Each revolution will turn the spout 1/500 of a circle, which means that from 28 to 56 revolutions will move the spout from one outlet to the next. Once the spout is in position, the Speed Reducer acts as a lock to keep it from turning.

EXTERNAL CONTROL

PLC Inputs **12 - 24 VDC; Common C1; Sink or Source**

Description	Decimal Value	Binary Value	X4	X5	X6	X7
Stop	0	0000	0	0	0	0
Move to 1	1	0001	0	0	0	1
Move to 2	2	0010	0	0	1	0
Move to 3	3	0011	0	0	1	1
Move to 4	4	0100	0	1	0	0
Move to 5	5	0101	0	1	0	1
Move to 6	6	0110	0	1	1	0
Move to 7	7	0111	0	1	1	1
Move to 8	8	1000	1	0	0	0
Move to 9	9	1001	1	0	0	1
Move to 10	10	1010	1	0	1	0
Move to 11	11	1011	1	0	1	1
Move to 12	12	1100	1	1	0	0

PLC Outputs **17 - 240 VAC; Common C3; 0.5A Max**

Description	Y3	Y4
Ready	1	
Remote		1

When the operator presses the "Remote" button on the operator panel, output Y4 turns on.

To send a position command, turn on the corresponding inputs X4 - X7. After a one second delay, the spout will start turning, and output Y3 will turn off. You can turn off the inputs any time after output Y3 turns off. When the spout stops turning and is in position, output Y3 will turn back on.

If the position command you send is the current position, output Y3 will turn off for one second, then turn back on.

If the position you send is higher then the number of outlets, both outputs Y3 and Y4 will turn off, and the operator panel will say "Invalid Entry" with a yellow light. The operator will need to press the "Remote" button on the operator panel to restart remote mode.

The inputs need to be turned off before sending another position command.

If the operator presses "Run" or any other button on the operator panel, or if an error occurs, output Y4 will turn off.

Output Y3 reflects "Ready" status of the green light, whether in remote mode or not.

This page intentionally left blank.

WARRANTY

The full extent of the warranty supplied by Honeyville Metal, Inc. is to correct any defects in material and/or workmanship on the products manufactured only by Honeyville Metal, Inc. This warranty period extends for **one year** from the date the product arrives on the site where installation will take place. Honeyville Metal, Inc. retains the right to review and/or adjust the time period for those products that may be held in inventory at a dealer's warehouse. Honeyville Metal, Inc. retains the final authority on determining if a product is within the warranty period and if full replacement of that product is required to retain the integrity of our products reputation and meet the customer's expectations. Honeyville Metal, Inc. will not furnish labor for replacement of any defective product or components of a product. Any product that is determined defective by both Honeyville Metal, Inc. and the end user who purchased the product may not be returned to Honeyville Metal, Inc. without the receipt of Return Authorization. Returned products must be shipped to Honeyville Metal, Inc. prepaid unless instructed otherwise and must be clearly marked with a Return Merchandise Authorization (RMA) number that needs to be obtained prior to the return shipment. This warranty supplied by Honeyville Metal, Inc. excludes damage to products while in transit to the destination on all public forms of transportation except the trucking equipment owned and operated by Honeyville Metal, Inc. This warranty does not cover performance guarantees on products, only defects in material and/or workmanship as prior statement. Honeyville Metal, Inc. does honor vendor warranties that extend beyond the one year period and will pass warranty coverage on to the purchaser of that vendor product.

CERTIFICATE OF QUALITY

Every effort has been made to make this equipment the best value you can obtain for your money. All the components have been inspected and assembled. The complete system has been tested to insure proper operation. We sincerely hope this equipment and our efforts meet with your approval. The full extent of Honeyville Metal, Inc. warranty is to correct any defects in material or workmanship in those products manufactured by Honeyville Metal, Inc. Motors and drives, and all electrical and air control parts carry a one-year warranty.

READ INSTRUCTIONS CAREFULLY BEFORE OPERATING!

THIS UNIT WAS FINAL INSPECTED AND PACKED BY _____